Integrate Spatial Information into Channel Attention via a Multi-Scale Convolutional Attention Module

Chentianye Xu[1, 2, *]
[1]Department of Artificial Intelligence, College of Computer Science, Sichuan University, Chengdu 610065, China
[2]Wu Yuzhang Honors College, Sichuan University, Chengdu 610065, China
[*]Corresponding author's email: xuchentianye@stu.scu.edu.cn

Abstract

Since the introduction of attention mechanisms, convolutional networks began to have the human-like ability to focus on regions of interest in images, which has contributed to breakthroughs in many computer vision tasks. Among all the attention mechanisms, channel attention is a relatively mature branch. The basic idea is that each channel provides information about a specific feature, so by adaptively adjusting the weight of each channel, the network can decide which features matter. However, almost all the works about channel attention fail to integrate spatial information to guide feature selections. In this paper, the researcher proposes a Multi-Scale Convolutional Attention Module (MSCAM), which integrates spatial information into channel attention. By performing several single-kernel multi-scale convolutions over input feature maps, the module outputs 'weight feature maps' describing the importance of each pixel, and by replacing global average pooling (GAP) with vector multiplication between the 'weight feature maps' and each input feature map channel, it can generate attention vectors containing richer spatial information. In this way, spatial information can effectively contribute to the adaptive feature selection process. The proposed module's performance, proved by experiments on several datasets, exceeds its counterparts without spatial information.

1 Introduction

Deep Convolutional Networks (ConvNets) have been providing a powerful impetus for the development of computer vision (CV) and bringing great breakthroughs for many tasks in this field since its emergence. Nevertheless, since the convolution and pooling processes are the same for every respective field of a feature map, a pure ConvNet does not tend to pay more attention to some important local information of an object, and then combine the local information to form an overall impression of the object as a human observer does [1]. Instead, it pays the same attention to each part of the feature map, which undoubtedly produces relatively poor efficiency. Such a problem led many researchers to dive into works about how to give human-like attention mechanism to ConvNet, and many of them achieve great success, contributing to breakthroughs in a lot of CV tasks like image classification [2, 9], object segmentation [12], medical image processing [10, 11], etc. These works can be roughly divided into four basic classes based on the data domain [1]. Among all of them, channel attention is a relatively mature branch. Its main idea is that for a ConvNet, each channel of one of its output feature maps can be regarded as information about a specific feature of the observed object, so adaptively adjusting the weight of each channel can let the network decide which features of the object matter.

However, almost all of these channel attention mechanisms [2, 4-7] take into account each channel of a feature map in isolation, using GAP or similar methods to extract channel information, which neglects the correlation between channels during the 'squeeze' process and fails to integrate spatial information into the feature selection process. Although works like GSoP-Net [3] and ADAM [11] consider correlations between channels, they don't introduce multi-scale features which have the potential to further improve performance.

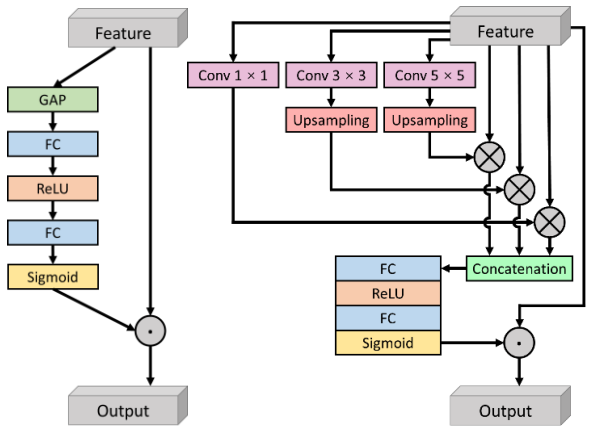

(a) SE Block (b) MSCAM

Figure 1 The original SE Block and the proposed Multi-Scale Convolutional Attention Module (MSCAM). GAP = global average pooling, FC = fully-connected layer, Conv $x \times x$ = convolutional layer with kernel size $x \times x$.

In this paper, the researcher proposes a Multi-Scale Convolutional Attention Module (MSCAM), which takes advantage of multi-scale convolution to integrate spatial information into channel attention. The mechanism the re-

searcher proposes not only emphasizes channel correlation during the 'squeeze' process, but also allows multi-scale spatial information to guide the feature selection. The general structures of the original SE Block [2] and the proposed Multi-Scale Convolutional Attention Module (MSCAM) are illustrated in **Figure 1**.

First, MSCAM employs 3 single-kernel convolutions with different kernel sizes to extract the input feature map's spatial information as 3 single-channel feature maps, which are called 'weight feature maps' in this paper. This structure draws on the experience of the Inception module [14]. Then the original GAP used in SENet [2] is replaced by vector multiplication between the weight feature maps (all are upsampled to match the sizes of input feature maps) and each input feature map channel. Finally, these vectors are concatenated and fed into an FC network to output the final attention vector, each element of which represents the weight of a specific input feature map channel. In this way, spatial information can effectively contribute to the adaptive feature selection process.

The experiments show that MSCAM is an effective structure for allowing spatial information to guide the feature selection process. It phenomenally improves several mainstream ConvNets' classification performance on datasets containing samples with large differences in distribution locations such as ISIC2017.

This paper's major contributions are as follows. (1) An effective mechanism of integrating spatial information into the feature selection process in channel attention is proposed. (2) Based on the proposed mechanism, a highly modular block called MSCAM is designed, which can be merged into any ConvNets structure. (3) The researcher verifies the effectiveness of the proposed mechanism through analyses and ablation studies on CIFAR-10, CIFAR-100 [23], and ISIC2017 [25], using different ConvNet architectures.

2 Related Work

Channel attention with spatial information. Squeezing channel information and spatial information can be seen as performing operations on different data domains [1]. Channel attention is a sort of mechanism generating attention mask across the channel domain and taking advantage of it to select features. It can be regarded as guiding the model to care more about what is important. While spatial information is generated from the spatial domain and describes where/which part is important. There are 2 major directions of combining channel attention with spatial information: (1) Employ channel attention and spatial attention together; (2) Allow Spatial Information to Guide Channel Selections. The residual attention network [15] is the opening work of the first direction, using a bottom-up top-down structure to directly output a 3D attention map, which is followed by works like SCNet [16] and Strip Pooling [17]. There are also works separating channel and spatial attention for computational efficiency, such as CBAM [9], BAM [18], scSE [19], etc. Taking CBAM as an example, CBAM performs the channel attention and spatial attention mechanisms in order. Such a structure empowers CBAM both to select useful channels (or features) and to enhance important areas. However, just because of the split of the channel attention and spatial attention, CBAM fails to allow the spatial information to guide feature selection, which might well have improved the performance. Also, simply by merging two feature maps produced by max pooling and average pooling using a convolutional layer with only one kernel, CBAM may suffer from lacking multi-scale receptive fields.

As for the second direction, ADAM [11] makes great contributions, where two attention mechanisms GAP and PC are combined. Among them, the PC (pixel-wise correlation) module extracts information from the spatial domain to form channel-wise data. Although this method does make spatial information take part in channel selection, the uni-scale convolution leads this module to suffer from a narrow field of vision.

Multi-scale convolution. Given that larger kernel sizes are better at extracting semantic information, while smaller ones do better in detail abstraction [10], using multi-scale convolutions can make the model have different attention effects, providing richer information. The emergence of the Inception module [14] and its improved version [21, 22] set the researchers thinking about widening the network rather than increasing the depth as they used to do. By performing convolutions with different kernel sizes in a single layer, this layer has receptive fields of different sizes, and through concatenating the output feature maps, it merges features of different scales.

In this paper, the researcher borrows the idea of multi-scale convolutions in the Inception module, to empower the original SE Block with the ability to "see" feature maps on different scales and to allow spatial information extracted by multi-scale convolutions to guide the selection of channels. This method is proved to be effective on several mainstream ConvNet architectures by experiment results on ISIC2017, CIFAR-10, and CIFAR-100 datasets.

3 Multi-Scale Convolutional Attention Module

The proposed Multi-Scale Convolutional Attention Module (MSCAM) structure is shown in **Figure 1b**, and a more detailed illustration is shown in **Figure 2**. This proposed module follows the basic structure of SENet, having the squeeze and excitation module. In this part, I explain the mechanism of the squeeze and excitation modules of MSCAM based on the comparison with their counterparts in SENet, and give formulas to describe the mechanism of MSCAM. At the end of this part, I also put forward methods of applying MSCAM to ConvNets.

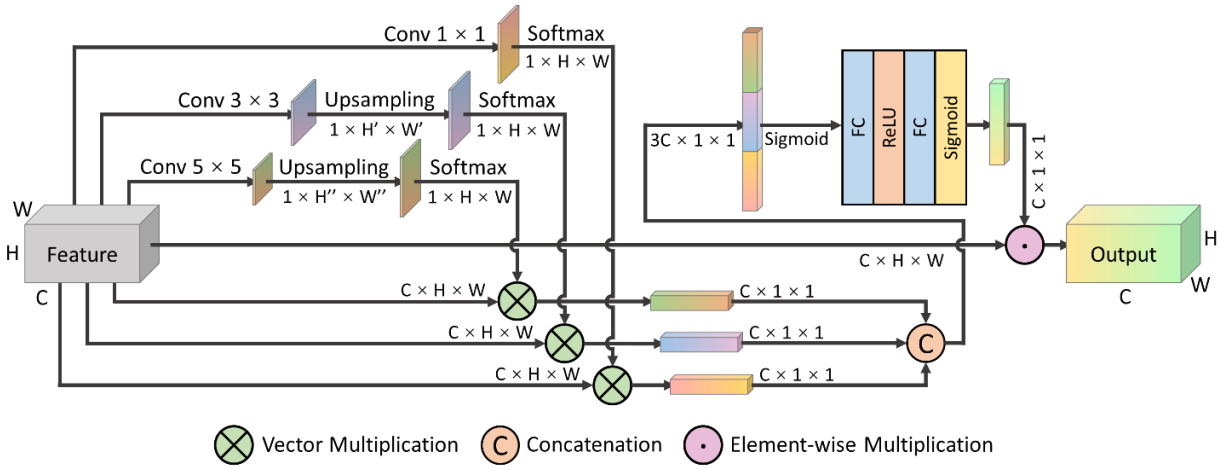

Figure 2 Multi-Scale Convolutional Attention Module (MSCAM). C = channels, H = height, W = width, Conv $x \times x$ = convolutional layer with kernel size $x \times x$, and FC = fully-connected layer.

3.1 Multi-Scale Spatial Information Squeeze

The squeeze module functions as a spatial information extractor, similar to its counterpart in SE Block. However, in SE Block, the spatial information is extracted through GAP, which is not complex enough to fetch relatively rich spatial information [1]. To solve this problem, the researcher proposes the method of employing single-kernel convolutions on the input feature maps to generate single-channel 'weight feature maps'. Here I assume that by carefully training this module, we can ensure the weights of the convolutional kernels are well learned to capture the global spatial information into the weight feature maps, where the value of each pixel represents the global importance of this position, considering all the channels. Then these weight feature maps multiply the original feature map in their vector form to output weight vectors, whose lengths are equal to the input feature map channel numbers. In this way, the global spatial information generated by convolutions explicitly guides the form of weight vectors, and the channel correlations are taken into account earlier and clearer, rather than simply relying on the fully-connected layer in the excitation module to take the work as SE Block does. In addition, to empower this module to capture richer spatial information, the idea in Inception is also employed here, using convolutions with different kernel sizes to extract multi-scale spatial features. After these convolutions, weight vectors generated by them are concatenated together to be ready to enter the excitation module.

In practice, as is shown in **Figure 2**, receiving feature maps with size $C \times H \times W$ from the output of previous layers, the module first performs three single-kernel convolutions with different kernel sizes on these maps, which are 1×1, 3×3, and 5×5 respectively, and the stride and padding are set to 1 and 0 for all three convolutions. Therefore, we can easily calculate the output size, getting $H' = H - 2$, $W' = W - 2$, $H'' = H - 4$, $W'' = W - 4$. To make the weight feature maps match the size of input feature maps so that the vector multiplication between them can work, all weight feature maps are upsampled to $1 \times H \times W$ with bilinear interpolation. For the convenience of coding, I resize the weight feature maps $\boldsymbol{W}_1$, $\boldsymbol{W}_2$, and $\boldsymbol{W}_3$ from size $1 \times H \times W$ to size $HW \times 1$, and the input feature map $\boldsymbol{I}$ from size $C \times H \times W$ to $C \times HW$, then the calculation can be reduced to matrix multiplication, which is easier to implement. What's worth a mention is that the output weight feature maps go through a softmax function to make training more stable. Therefore, the final weight vector w output by the squeeze module is calculated by:

$$\boldsymbol{W}_p = \text{Upsampling}\left[\text{Conv}_p\left(\boldsymbol{I}\right)\right], \tag{1}$$

$$\boldsymbol{m}_p = \text{Concat}_{q=0}^{C-1}\left[\sum_{j=0}^{HW-1} \frac{\exp\left(\boldsymbol{W}_{pj}\right)}{\sum_{i=0}^{HW-1}\exp\left(\boldsymbol{W}_{pi}\right)} \boldsymbol{I}_{qj}\right], \tag{2}$$

$$\boldsymbol{w} = \sigma\left[\text{Concat}_{p=0}^{2}\left(\boldsymbol{m}_p\right)\right], \tag{3}$$

where σ denotes Sigmoid function.

3.2 Channel Selection

As for the excitation module, MSCAM follows the basic structure of SE Block, employing FC and non-linear layers to transform the weight vector output by the squeeze module into an attention vector. Then each channel of the original input feature map of MSCAM is rescaled by element-wise multiplying its corresponding weight in the attention vector, and during this process, features are selected. The generated feature map with rescaled channels is the final output of MSCAM.

In practice, the excitation module is realized with a sequence of an FC layer, a ReLU layer, another fully-connected layer, and a Sigmoid layer. The final output can be calculated by:

$$\boldsymbol{a} = \sigma\left[\boldsymbol{P}_2\delta\left(\boldsymbol{P}_1\boldsymbol{w}\right)\right], \tag{4}$$

$$\boldsymbol{O} = \boldsymbol{a}\boldsymbol{I}, \tag{5}$$

where δ represents ReLU function, σ represents Sigmoid function, $\boldsymbol{P}_1$ and $\boldsymbol{P}_2$ are the parameters of the first and the second FC layer respectively.

3.3 Apply MSCAM to ConvNets

Similar to SE Block, the MSCAM is a highly modular architecture that can be seamlessly integrated into any ConvNet structure. However, what's worth mentioning is that due to these convolutional layers and fully-connected layers, the computational complexity is relatively higher than SE Block. When inserting it into ConvNets, we should consider a trade-off between performance and network complexity. Therefore, I suggest that an MSCAM be added not after every residual block when applying this structure to ResNet [13]. However, when doing experiments in **Part 4**, to compare with SENet, I insert MSCAM at the end of each residual module of ResNet [13] which I call MSC-ResNet in this paper, using the same configuration as SE-ResNet [2]. The sample architecture of MSC-ResNet-50 is shown in **Table 1**.

Table 1 Architectures of MSC-ResNet-50.

Output size	MSC-ResNet-50
112 × 112	Conv, 7 × 7, 64, stride 2
56 × 56	Max pool, 3 × 3, stride 2
	[Conv, 1×1, 64 Conv, 3×3, 64 Conv, 1×1, 256 Conv, 1? , 3×3, 5×5, 1 FC, [32, 256]] ×3
28 × 28	[Conv, 1×1, 128 Conv, 3×3, 128 Conv, 1×1, 512 Conv, 1? , 3×3, 5×5, 1 FC, [64, 512]] ×4
14 × 14	[Conv, 1×1, 256 Conv, 3×3, 256 Conv, 1×1, 1024 Conv, 1? , 3×3, 5×5, 1 FC, [128, 1024]] ×6
7 × 7	[Conv, 1×1, 512 Conv, 3×3, 512 Conv, 1×1, 2048 Conv, 1? , 3×3, 5×5, 1 FC, [256, 2048]] ×3
1 × 1	GAP, 1000-d FC layer, Softmax

4 Multi-Scale Convolutional Attention Module

In this part, the researcher conducts groups of comparative experiments to verify the effectiveness of MSCAM. First, I evaluate the proposed module on classification tasks with ISIC2017, CIFAR-10, and CIFAR-100 datasets. What's more, I also conduct an ablation analysis of MSCAM to verify whether multi-scale convolution works as I expected, comparing three different modules which are (1) the original MSCAM, (2) the modified MSCAM with only 1 × 1 convolutional layer, and (3) the modified MSCAM with only 1 × 1 and 3 × 3 convolutional layers.

Datasets The experiments are mainly conducted on the ISIC2017 dataset. ISIC2017 is a skin-lesion dataset composed of 2000 training, 150 validation, and 600 test images, all of which have RGB channels. These images are divided into 3 categories: melanoma, seborrheic keratosis, and nevus. To enlarge the dataset, I follow [10], adding 466 melanoma, 32 seborrheic keratosis, and 822 nevus images from the ISIC Archive into the training dataset. To evaluate the generalization ability of MSCAM, I also train models on the CIFAR-10 and CIFAR-100 datasets, which are composed of 50k training and 10k test images, all of which are in the size 3 × 32 × 32 (RGB). There are respectively 10 and 100 categories in the two datasets.

Experimental Setting As for training on the ISIC2017 dataset, three models are compared: (1) the baseline ResNet-34; (2) the SE-ResNet-34 with the SE Block; and (3) the MSC-ResNet-34 with the proposed MSCAM. SE Block and MSCAM are plugged into the baseline architecture in the way mentioned in [2]. The skin-lesion images are augmented with random flip and random affine, and resized to 224 × 224 with bicubic interpolation to match the default input size of ResNet. The weights are initialized with Kaiming Initialization [24]. What's more, since I load pre-trained parameters before training the three models, the total epoch is not set too large, which is 100 in this experiment. These models are optimized using Adam. The initial learning rate is 2e-4 and is divided by 5 at the 50th and 75th epochs, the batch size is 16 and the early stopping trick is employed. As for training from scratch on the CIFAR-10 and CIFAR-100 dataset, the 3 models mentioned above are still used, but the layer numbers are changed to 18 and down sampling blocks are modified to take the input size 32 × 32. Data augmentations including random crop and random horizontal flip are used. The batch size is 128. These models are optimized using SGD with a weight decay of 1e-4 and an initial learning rate of 0.25, which is divided by 10 at the 80th and 95th epochs. All of the models mentioned above are implemented with PyTorch and trained on two RTX 3090 GPUs.

Evaluation Metrics For the classification task on ISIC2017, I use four evaluation metrics: accuracy, sensitivity, specificity, and area under the receiver operating characteristic curve (AUC). Their definitions are shown below.

$$\text{accuracy} = \frac{\text{True Positive} + \text{True Negative}}{\text{Total Sample Number}}, \tag{6}$$

$$\text{sensitivity} = \frac{\text{True Positive}}{\text{True Positive} + \text{False Negative}}, \quad (7)$$

$$\text{specificity} = \frac{\text{True Negative}}{\text{True Negative} + \text{False Positive}}, \quad (8)$$

$$\text{AUC} = \int_0^1 t_{pr}\left(f_{pr}\right) df_{pr} = P(S_1 > S_0), \quad (9)$$

where t_{pr} is the true positive rate, and f_{pr} is the false positive rate. S_1 and S_0 are the confidence scores for a negative and positive instance respectively. As for the classification task on the CIFAR-10 and CIFAR-100 datasets, accuracy is used as the evaluation metric.

4.1 Results on ISIC2017

In this subpart, the researcher conducts image classification on the ISIC2017 dataset with ResNet-34, SE-ResNet-34, and MSC-ResNet-34 to test the effectiveness of MSCAM. The neuron number of the FC hidden layer in MSCAM is set to C / 8, where C is the input channel number. The model information and experimental results are presented in **Table 2** and **Table 3** respectively.

Table 2 Parameter numbers and floating point operation numbers per second (FLOPs) of ResNet-34, SE-ResNet-34, and MSC-ResNet-34. The lowest values are highlighted in black bold.

Models	Params	FLOPs
ResNet-34	**21.29 M**	**3.67 G**
SE-ResNet-34	21.45 M	3.67 G
MSC-ResNet-34	22.05 M	3.72 G

As is shown in **Table 3**, the proposed MSC-ResNet-34 outperforms its two counterparts except in terms of the specificities, which means the proposed MSCAM effectively improves the model performance by providing a channel attention mechanism with richer spatial information. However, according to **Table 2**, we can tell that the performance improvement brought by MSCAM also brings more complexity. Compared with its two counterparts, the new model increases in both parameter numbers and FLOPs. Although the increases are relatively small, they also contribute to a reduction in computational performance to some extent.

4.2 Results on CIFAR-10 and CIFAR-100

In this subpart, to further validate the module's generalization performance, the researcher also conducts classification with three network architectures on CIFAR-10 and CIFAR-100: the modified ResNet-18, SE-ResNet-18, and MSC-ResNet-18. The neuron number of the FC hidden layer in MSCAM is set to 3C / 16 and C / 8 for training models from scratch on CIFAR-10 and CIFAR-100 respectively, where C is the input channel number. The model information and experimental results are presented in **Table 4**.

From **Table 4**, we can find the model with MSCAM achieves the best ACC value for the classification task on CIFAR-10 and CIFAR-100, proving that MSCAM has nice generalization performance and works well for different datasets. However, similar to the classification task on ISIC2017, the performance improvement is also accompanied by a small increase in computational complexity.

4.3 Ablation Study

In this subpart, to verify whether multi-scale convolution works as I expected, I conduct an ablation study, comparing three different modules which are (1) the original MSCAM, (2) the modified MSCAM-Conv1 with only 1 × 1 convolutional layer, and (3) the modified MSCAM-Conv2 with only 1 × 1 and 3 × 3 convolutional layers. To facilitate multiple experiments, the researcher chooses to conduct experiments on the CIFAR-100 dataset. There are totally four models to compare: the modified ResNet-18, Conv1-ResNet-18, Conv2-ResNet-18, and MSC-ResNet-18. The neuron number of the FC hidden layer in MSCAM is set to C / 8 for MSCAM-Conv1, MSCAM-Conv2, and MSCAM, where C is the input channel num-

Table 3 Classification performance of ResNet-34, SE-ResNet-34, and MSC-ResNet-34 on ISIC2017. The highest values are highlighted in black bold.

Models	Total ACC (on Val Set)	Melanoma Classification (on Test Set)				Seborrheic Keratosis Classification (on Test Set)			
		AUC	ACC	Sensitivity	Specificity	AUC	ACC	Sensitivity	Specificity
ResNet-34	0.806	0.839	0.810	0.598	**0.861**	0.832	0.903	0.700	**0.939**
SE-ResNet-34	0.839	0.847	0.822	0.658	**0.861**	0.835	0.903	0.722	0.935
MSC-ResNet-34	**0.850**	**0.853**	**0.825**	**0.684**	0.859	**0.847**	**0.913**	**0.800**	0.933

Table 4 Model complexity and classification performance of ResNet-18, SE-ResNet-18, and MSC-ResNet-18 on CIFAR-10 and CIFAR-100. The best values are highlighted in black bold.

Models	CIFAR-10			CIFAR-100		
	Params	FLOPs	Test ACC	Params	FLOPs	Test ACC
ResNet-18	**11.17 M**	**556.65 M**	0.936	**11.22 M**	**556.70 M**	0.733
SE-ResNet-18	11.26 M	556.74 M	0.938	11.31 M	556.79 M	0.740
MSC-ResNet-18	11.59 M	565.60 M	**0.939**	11.64 M	565.65 M	**0.744**

ber. The experimental results are presented in **Table 5**.

Table 5 Classification performance of four models with different numbers of convolution scales in MSCAM on CIFAR-100.

Models	Test ACC
ResNet-18	0.733
Conv1-ResNet-18	0.739
Conv2-ResNet-18	0.741
MSC-ResNet-18	0.744

As is vividly shown in **Table 5**, compared with ResNet-18, models with MSCAM or its modified versions achieve better classification performance on CIFAR-100. What's more, there is an obvious trend that the more convolution scales, the better the performance is, which implies that a multi-scale convolution structure is effective for extracting richer spatial information, thus contributing to the generation of more accurate channel attention.

5 Conclusion

In this paper, the researcher proposes the Multi-Scale Convolutional Attention Module (MSCAM), one that integrates spatial information into the generation of channel attention through multi-scale convolutions. Several groups of experiments prove the proposed module outperforms its counterparts without spatial information. Since the spatial information guides the channel selection process, this module is effective for training on datasets containing samples with large differences in location distribution and object areas, such as ISIC2017. However, the introduction of multi-scale convolutions also brings an increase in model complexity. In the future, the researcher will do more studies on how to reduce the complexity of this module while maintaining its performance.

6 Literature

[1] Guo, M. H., Xu, T. X., Liu, J. J., Liu, Z. N., Jiang, P. T., Mu, T. J., ... & Hu, S. M. (2022). Attention mechanisms in computer vision: A survey. *Computational Visual Media*, 1-38.

[2] Hu, J., Shen, L., & Sun, G. (2018). Squeeze-and-excitation networks. In *Proceedings of the IEEE conference on computer vision and pattern recognition* (pp. 7132-7141).

[3] Gao, Z., Xie, J., Wang, Q., & Li, P. (2019). Global second-order pooling convolutional networks. In *Proceedings of the IEEE/CVF Conference on Computer Vision and Pattern Recognition* (pp. 3024-3033).

[4] Lee, H., Kim, H. E., & Nam, H. (2019). Srm: A style-based recalibration module for convolutional neural networks. In *Proceedings of the IEEE/CVF International Conference on Computer Vision* (pp. 1854-1862).

[5] Yang, Z., Zhu, L., Wu, Y., & Yang, Y. (2020). Gated channel transformation for visual recognition. In *Proceedings of the IEEE/CVF Conference on Computer Vision and Pattern Recognition* (pp. 11794-11803).

[6] Wang, Q., Wu, B., Zhu, P., Li, P., & Hu, Q. (2020). ECA-Net: Efficient Channel Attention for Deep Convolutional Neural Networks. In *Proceedings of the IEEE/CVF Conference on Computer Vision and Pattern Recognition* (pp. 11531-11539).

[7] Qin, Z., Zhang, P., Wu, F., & Li, X. (2021). Fcanet: Frequency channel attention networks. In *Proceedings of the IEEE/CVF International Conference on Computer Vision* (pp. 783-792).

[8] Zhang, H., Dana, K., Shi, J., Zhang, Z., Wang, X., Tyagi, A., & Agrawal, A. (2018). Context encoding for semantic segmentation. In *Proceedings of the IEEE conference on Computer Vision and Pattern Recognition* (pp. 7151-7160).

[9] Woo, S., Park, J., Lee, J. Y., & Kweon, I. S. (2018). Cbam: Convolutional block attention module. In *Proceedings of the European conference on computer vision (ECCV)* (pp. 3-19).

[10] Zhang, J., Xie, Y., Xia, Y., & Shen, C. (2019). Attention residual learning for skin lesion classification. *IEEE transactions on medical imaging*, 38(9), 2092-2103.

[11] Wu, H., Pan, J., Li, Z., Wen, Z., & Qin, J. (2020). Automated skin lesion segmentation via an adaptive dual attention module. *IEEE Transactions on Medical Imaging*, 40(1), 357-370.

[12] Fu, J., Liu, J., Tian, H., Li, Y., Bao, Y., Fang, Z., & Lu, H. (2019). Dual attention network for scene segmentation. In *Proceedings of the IEEE/CVF conference on computer vision and pattern recognition* (pp. 3146-3154).

[13] He, K., Zhang, X., Ren, S., & Sun, J. (2016). Deep residual learning for image recognition. In *Proceedings of the IEEE conference on computer vision and pattern recognition* (pp. 770-778).

[14] Szegedy, C., Liu, W., Jia, Y., Sermanet, P., Reed, S., Anguelov, D., ... & Rabinovich, A. (2015). Going deeper with convolutions. In *Proceedings of the IEEE conference on computer vision and pattern recognition* (pp. 1-9).

[15] Wang, F., Jiang, M., Qian, C., Yang, S., Li, C., Zhang, H., ... & Tang, X. (2017). Residual attention network for image classification. In *Proceedings of the IEEE conference on computer vision and pattern recognition* (pp. 3156-3164).

[16] Liu, J. J., Hou, Q., Cheng, M. M., Wang, C., & Feng, J. (2020). Improving convolutional networks with self-calibrated convolutions. In *Proceedings of the IEEE/CVF Conference on Computer Vision and Pattern Recognition* (pp. 10096-10105).

[17] Hou, Q., Zhang, L., Cheng, M. M., & Feng, J. (2020). Strip pooling: Rethinking spatial pooling for scene parsing. In *Proceedings of the IEEE/CVF Con-*

ference on Computer Vision and Pattern Recognition (pp. 4003-4012).

[18] Park, J., Woo, S., Lee, J. Y., & Kweon, I. S. (2018). Bam: Bottleneck attention module. *arXiv preprint arXiv:1807.06514*.

[19] Roy, A. G., Navab, N., & Wachinger, C. (2018). Recalibrating fully convolutional networks with spatial and channel "squeeze and excitation" blocks. *IEEE transactions on medical imaging*, 38(2), 540-549.

[20] Wu, Y., & He, K. (2018). Group normalization. In *Proceedings of the European conference on computer vision (ECCV)* (pp. 3-19).

[21] Szegedy, C., Vanhoucke, V., Ioffe, S., Shlens, J., & Wojna, Z. (2016). Rethinking the inception architecture for computer vision. In *Proceedings of the IEEE conference on computer vision and pattern recognition* (pp. 2818-2826).

[22] Szegedy, C., Ioffe, S., Vanhoucke, V., & Alemi, A. A. (2017, February). Inception-v4, inception-resnet and the impact of residual connections on learning. In *Thirty-first AAAI conference on artificial intelligence*.

[23] Krizhevsky, A., & Hinton, G. (2009). Learning multiple layers of features from tiny images.

[24] He, K., Zhang, X., Ren, S., & Sun, J. (2015). Delving deep into rectifiers: Surpassing human-level performance on imagenet classification. In *Proceedings of the IEEE international conference on computer vision* (pp. 1026-1034).

[25] Codella, N. C., Gutman, D., Celebi, M. E., Helba, B., Marchetti, M. A., Dusza, S. W., ... & Halpern, A. (2018, April). Skin lesion analysis toward melanoma detection: A challenge at the 2017 international symposium on biomedical imaging (isbi), hosted by the international skin imaging collaboration (isic). In *2018 IEEE 15th international symposium on biomedical imaging (ISBI 2018)* (pp. 168-172). IEEE.